Installation Instructions
Sunroom Skylight

Please read these instructions carefully. They will assure you an easy and trouble-free installation.

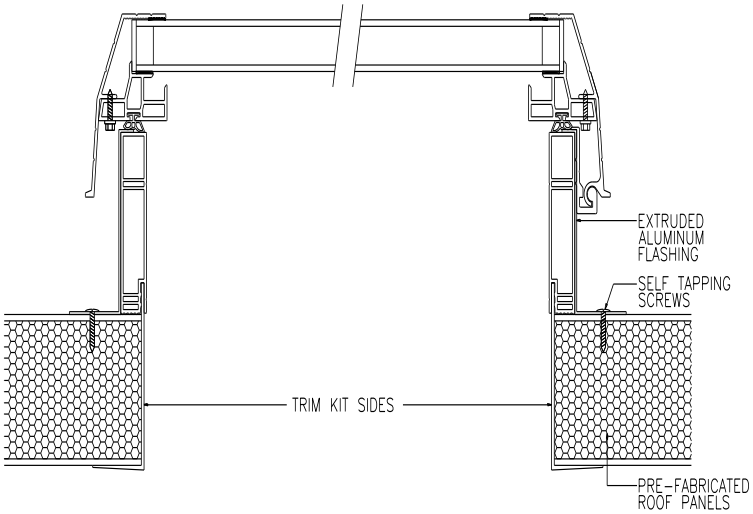

SKYLIGHT INSTALLATION

1. Cut the prefabricated roof panel to match the required skylight rough opening.

2. Apply a continuous sealant bead ¼” from the opening edge.

3. Insert all eight provided aligning tabs into the trim receiver channel at the bottom of the curb as shown.

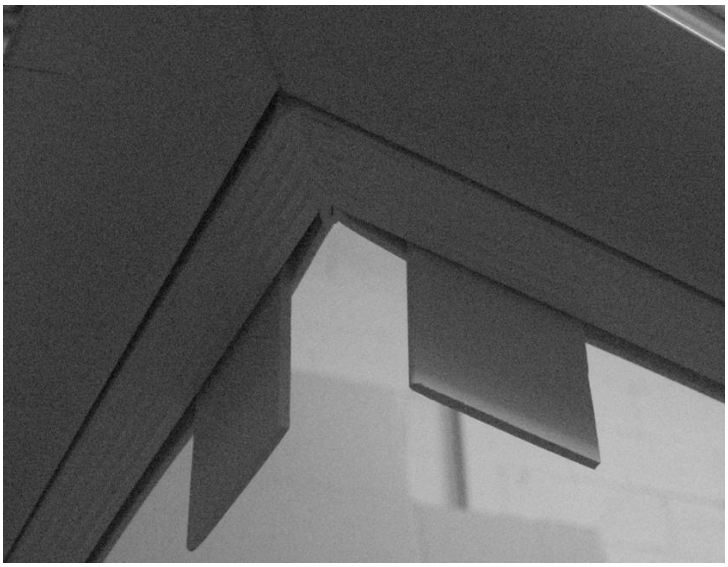

4. Center the skylight in the roof opening using the aligning tabs, ensuring the water-diverting hinge bar faces up toward the ridge.

5. Secure the skylight curb flange to the roof panel with self-tapping screws—either use sealing washers or apply sealant to each screw head. Apply Peel and Seal around the curb flange for a weather-tight finish

6. Remove the aligning tabs from the skylight curb, then install the PVC trim kit sides as shown.

7. The trim kit sides fit 6" panels and have notched corners for vinyl welded joints. Sides are scored so that they can be trimmed to also fit 3" or 4" panels; use the manufacturer's notch as a template when cutting and notching both ends.

8. Apply a bead of silicone to the top of the bottom flange and insert the short sides of the trim kit. Repeat with the long sides. The internal ridges in the receiver channel secure the trim.

9. Trim the sides if needed to keep them vertically plumb.

10. Fill any vertical corner gaps with silicone as necessary.

SUPREME SKYLIGHTS INC.
2185 Fifth Avenue
Ronkonkoma, NY 11779
Phone (631)738-0324
Fax (631)738-0325
www.supremeskylights.com