SUPREME SKYLIGHTS INC.

2185 5th Ave., Ronkonkoma, N.Y. 11779 Phone # (631)738-0324 Fax # (631)738-0325

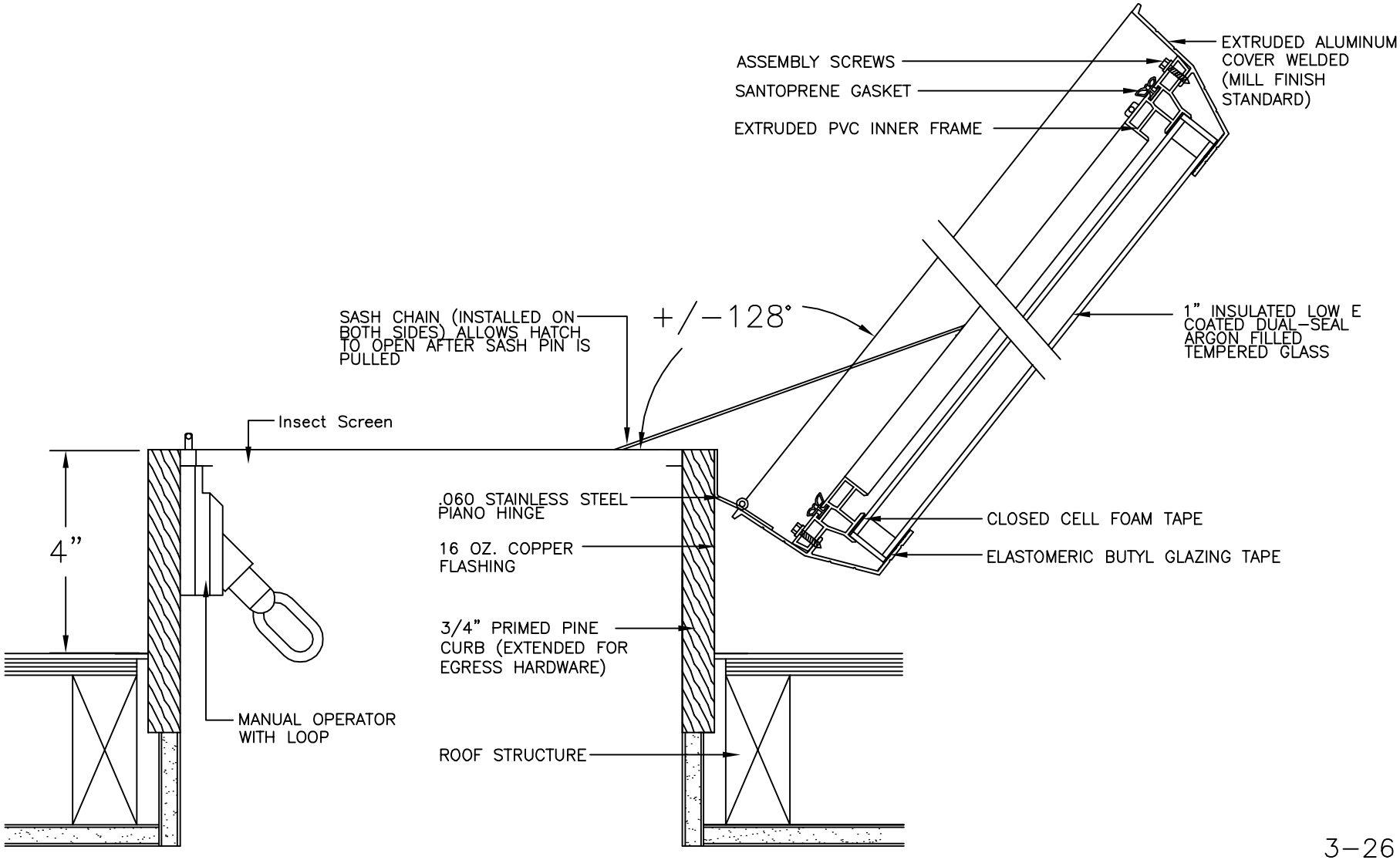

3-26

PRO SERIES COPPER FLASHED SKYLIGHT

PITCHED ROOF VENTED W/ROOF ACCESS HARDWARE